PARTS CATALOG

Ellis

MFG. COMPANY, INC.

Mitre Band Saw

Installation and Operating Instructions

Note: Not all saw parts are shown in this booklet

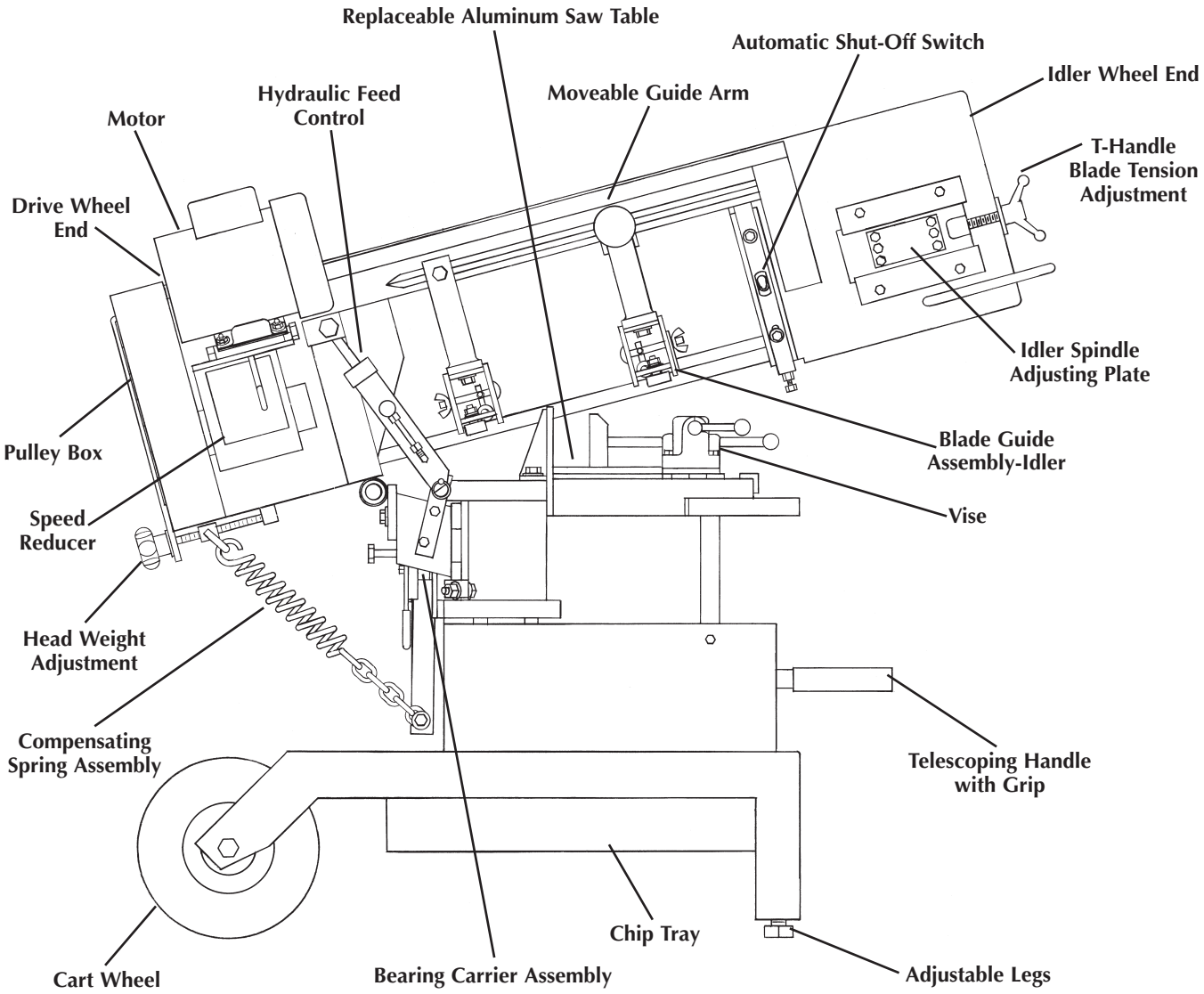

107 W. Railroad Street • P.O. Box 930219 • Verona, WI 53593-0219
Phone: (608) 845-6472 • Fax: (608) 845-5199 • www.ellissaw.com

1-800-383-5547

Breakdown of Bearing Assy. (only) Not recommended For ordering Separately

Important Note Re. Bearings
For New Set of Guide Bearing Assemblies Order: 2 Each of Parts: 19, 20, 21
- See page 2b for more info -

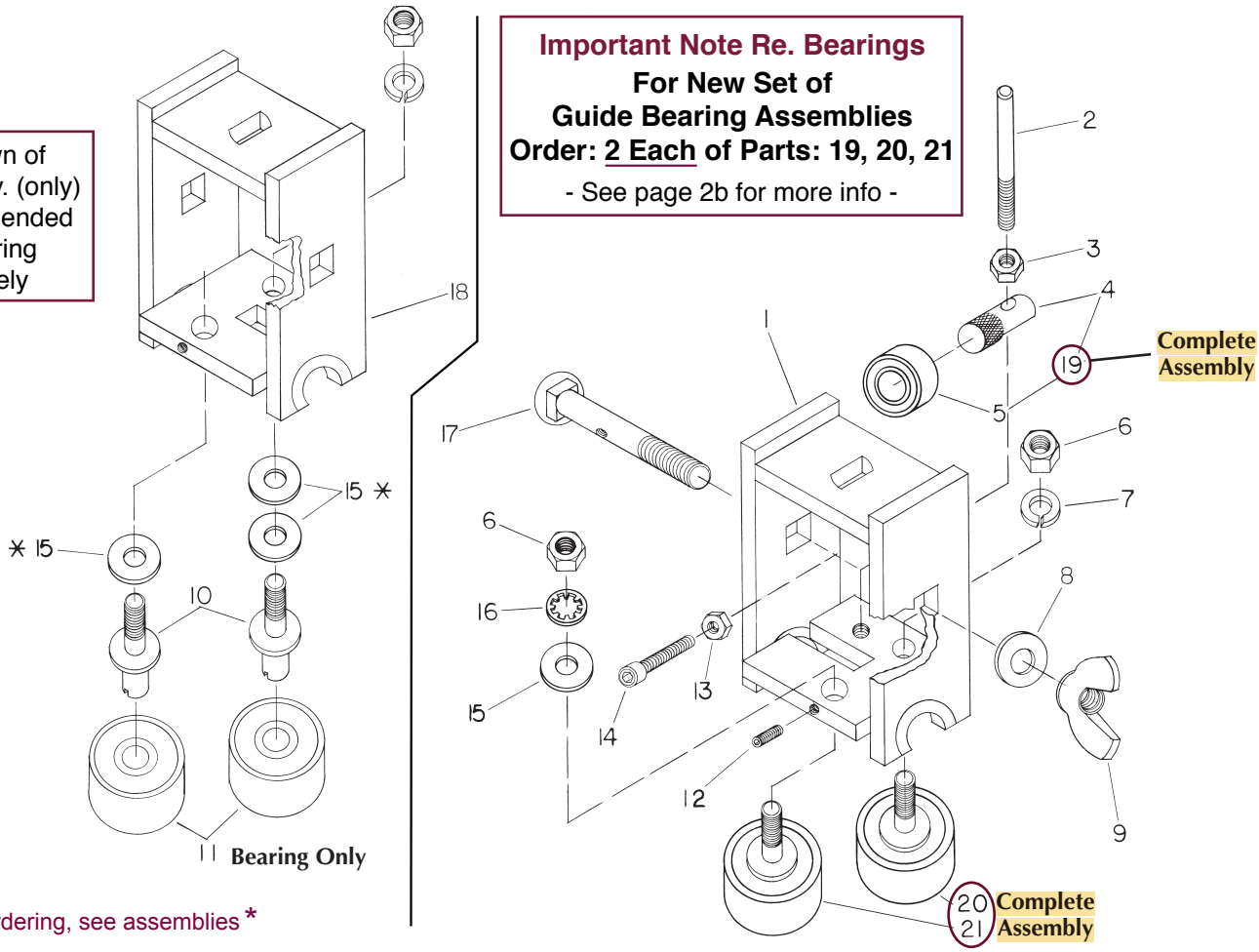

For ordering, see assemblies *

Blade Guide Assembly

Item No.	90H 1100	900 1000 1200	1440 1500	1600 1800 2000 3000	4000	Description
	Part Number For Models					
Complete Assy.	9016DC	5370	5539	5720	5732	Blade Guide Assembly, Drive End
Complete Assy.	9016IC	5371	5519	5721	5733	Blade Guide Assembly, Idler End
1	9016I	5391	5588	5588	5981	Housing Assembly, Idler
2	5541	5541	5541	5541	5541	Adjustment Stud, Bearing Plate
3	4260	4260	4260	4260	4260	1/4-20 Hex. Nut
4	6066	6066	6066	6066	5999	Spindle, Pressure Bearing
5	4499	4499	4499	4499	4522	Ball Bearing, Pressure
6	4260	4260	4266	4266	4279	Nut, Hex.
7	4336	4336	4337	4337	4343	Lock Washer, Spring
8	4310	4310	4310	4310	4311	Flat Washer, SAE
9	4271	4271	4271	4271	4270	Wing Nut or Stop Nut
10	5389	5389	5587	6074	6073	Spindle, Guide Bearing
11	4522	4522	4502	4502	4515	Ball Bearing, Guide
12	4140	4140	4140	4140		8-32 x 3/8 Set Screw
13	4258	4258	4258	4258	4260	Hex. Nut
14	4155	4155	4155	4155	4137	Socket Head Cap Screw
15		4304				Flat Washer, 3/16 or 1/4 Std.
16	4355	4355	4356	4356	4343	Lock Washer
17	5374	5374	5542	5542	6056	Guide Clamping Bolt
18	9016D	5390	5540	5540	5982	Housing Assembly, Drive
* 19	9012	9012	9012	9012	5996	Pressure Bearing Assembly
* 20	5406	5406	6730	6742	6747	Stationary Guide Bearing Kit
* 21	5407	5407	6732	6743	6747	Adjustable Guide Bearing Kit

*On all saws, except for the Model 4000, the stationary and adjustable kits are the same except for items 6, 16, and 15 which are included with the adjustable kits. On the Model 4000 there is no adjustable kit. Therefore, use part number 6747 for both bearing kits on the Model 4000.

For Replacing Bearings in Blade Guides, Order 2 Each of Parts 19, 20, 21

Pressure Bearing Assembly

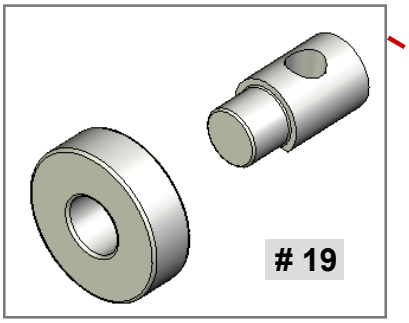

Saw Models	Part #
1600, 1800, 2000, 3000	9012
4000	5996

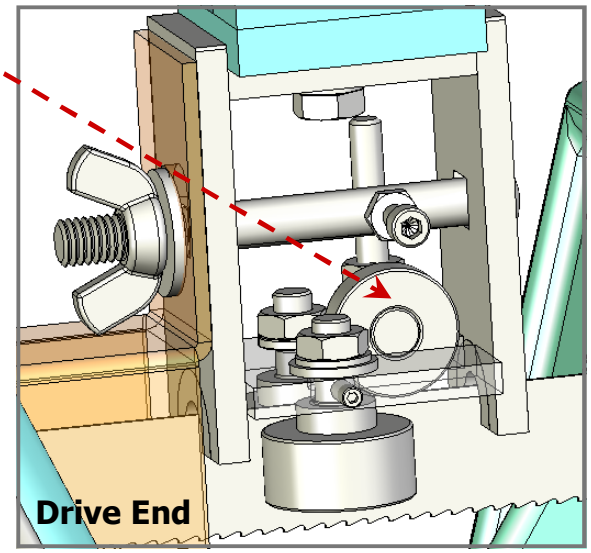

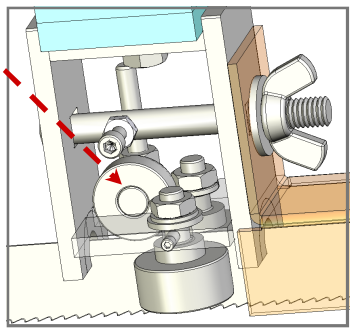

Idler End

For other models, See page 2

Stationary and Adjustable Guide Bearing Assemblies

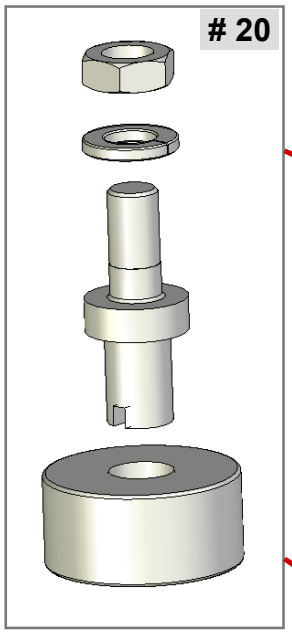

Stationary Bearing Assy.

Saw Models	Part #
1600, 1800, 2000, 3000	6742
4000	6747

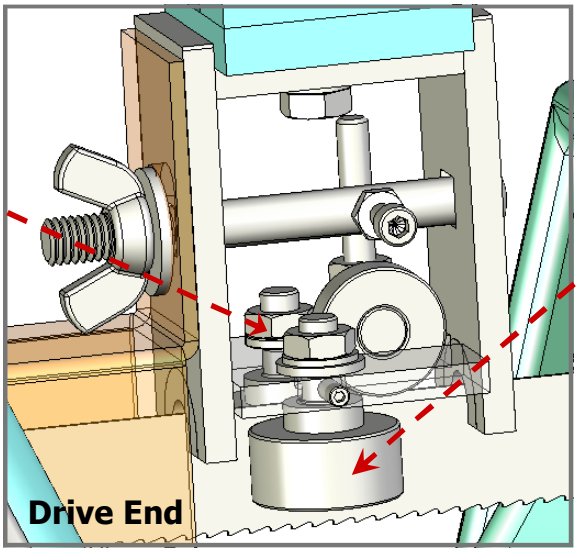

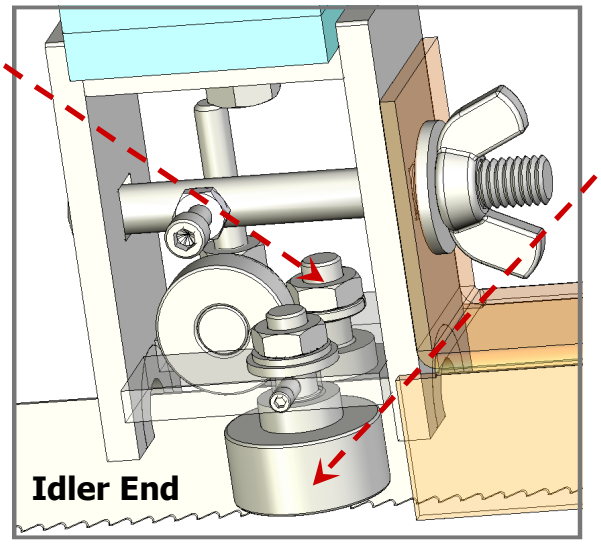

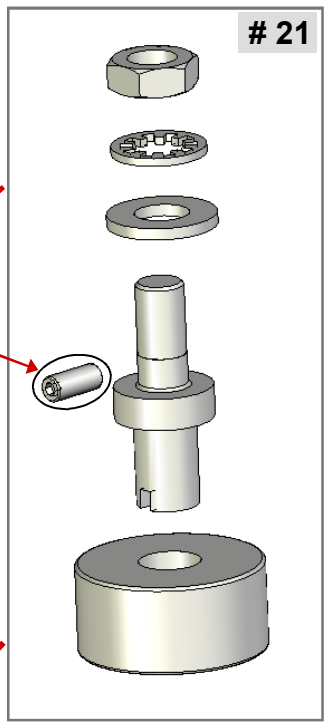

Adjustable Bearing Assy.

Saw Models	Part #
1600, 1800, 2000, 3000	6743
4000	6747

*Not part of Assy. kit

Ellis MFG. COMPANY, INC.

1-800-383-5547

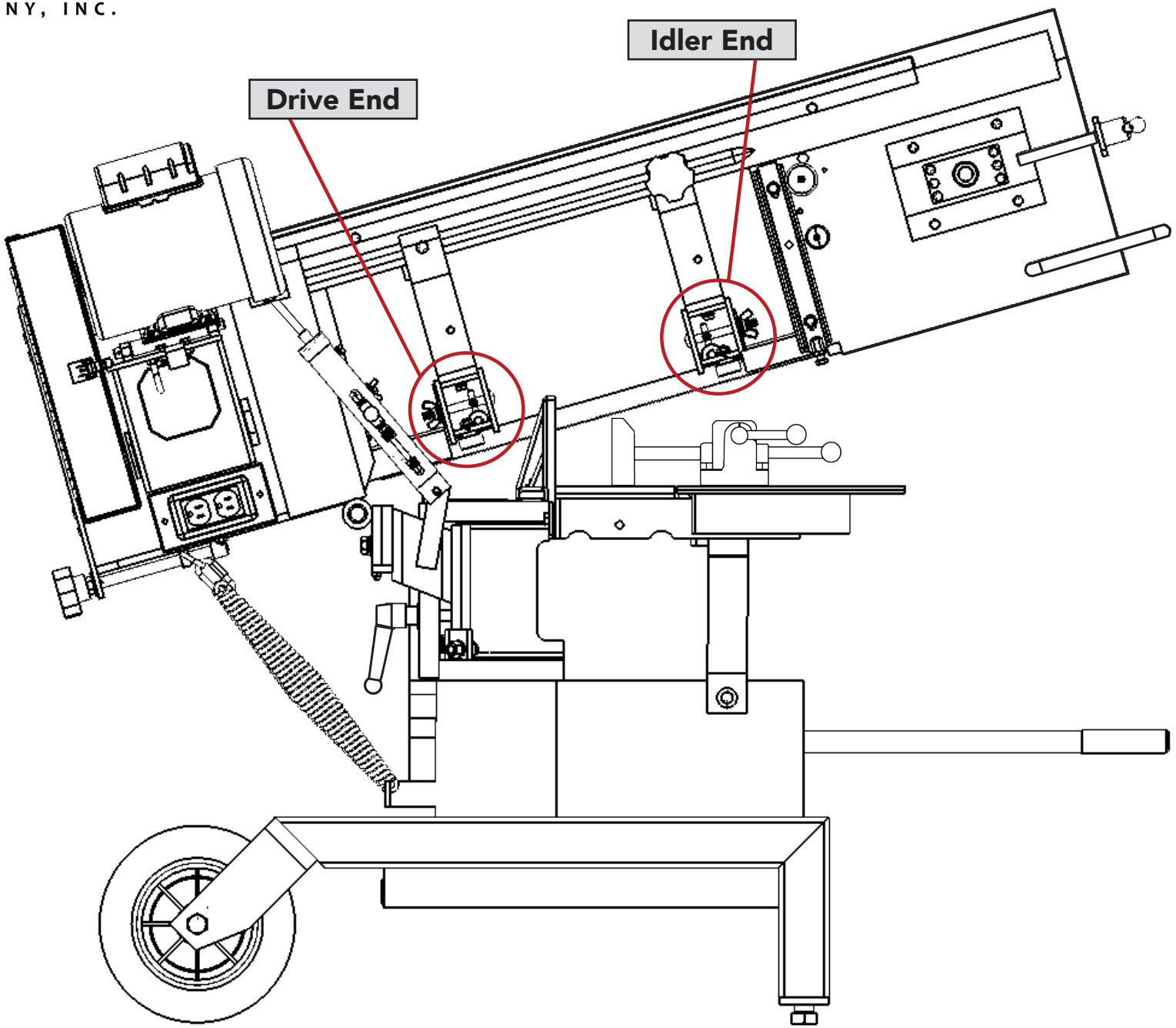

Hydraulic Feed Control Assembly

Item No.	Part Number For Models 90H 900 1000 1100 1200	1500 1600 1800	1440 2000	3000 4000	Description
Assy.	5355	5506	5708	5777	Hydraulic Feed Control Assembly
1	5529	5529	5529	5529	Cap
2	4950	4950	4950	4950	O-Ring-Shaft
3	5532	5532	5532	5532	Sealing Washer, Top
4	4951	4951	4951	4951	O-Ring-Cylinder
5	5361	5530	5530	5766	Shaft
6	4337	4337	4337	4337	Lock Washer, 5/16
7	5531	5531	5531	5531	Sealing Washer, Bottom
8	5533	5533	5533	5533	Leather Cup
9	5534	5534	5534	5534	Washer-Special
10	4266	4266	4266	4266	Nut, Hex. Jam, 5/16-24
11	5362	5528	5528	5767	Cylinder
12	4743	4743	4743	4743	Plug, Oil Fill
13	4730	4730	4730	4730	Male Elbow - Tube Fitting
14	4732	4732	4732	4732	Sleeve
15	4729	4729	4729	4729	Nut
16	5363	5590	5711	5706	Tube, 1/4 Dia. Plastic
17	4731	4731			Needle Valve-Tube Fitting
18	4728	4728	4728	4728	Male Elbow Assembly
19*	4727	4727			Needle Valve Assembly
20	5356	5749	5749	5748	Travel Stop Tube
21	6702	6702	6702	6702	Rebuilding Kit
22			5707	5707	Remote Needle Valve Assembly
23*	4808	4808			Flow Needle Valve Assembly
24	4735	4735			Elbow, Male to Male
25	4734	4734			Flow Needle Valve
26	4736	4736			Straight Fitting

*19 and 23 are interchangeable.

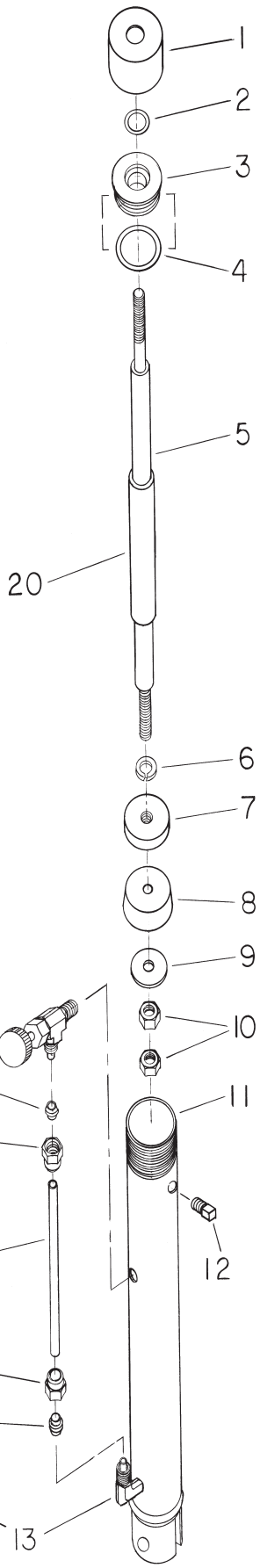

Saw Pivot Arm Assembly

1100	5393
1200	5393
1500	5685
1600	6350
1800	6366
2000	6350
3000	6366
4000	6366

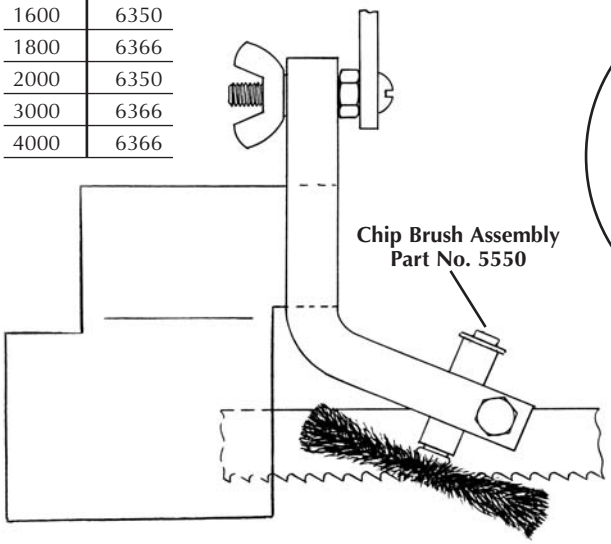

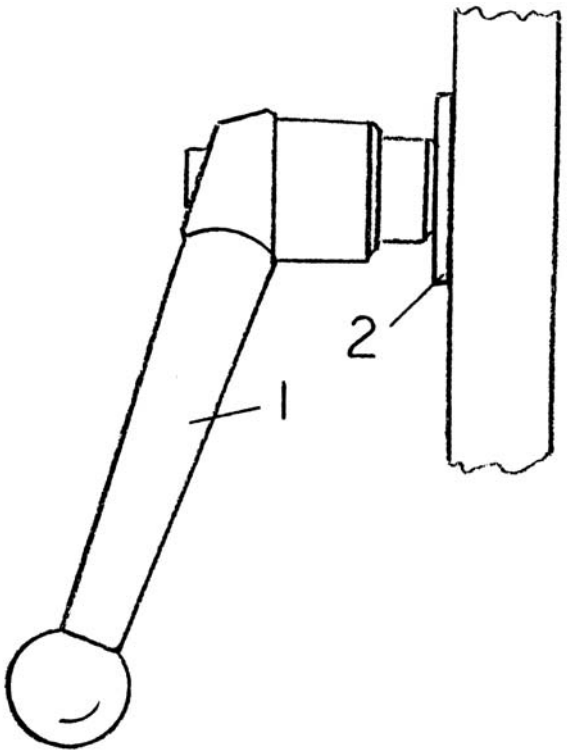

Mitre Head Locking Handle ALL MODEL SAWS

Item No.	Part No.	Description
1	4966	Mitre Head Locking Handle
2	4311	Flat Washer

Press center button to reset ratchet in Handle

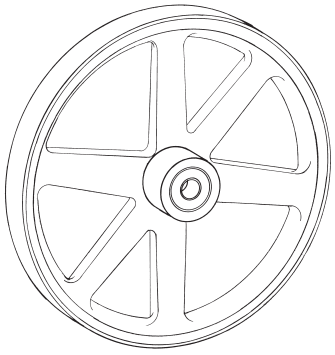

Idler Wheel and Bearing Assy. With Vulcanized Rubber

Part Number For Models			
90H 900 1000 1100 1200	1440 1500 1600 1800 2000	3000 4000	Description
5365	5788	5849	Idler Wheel & Bearing Assy.

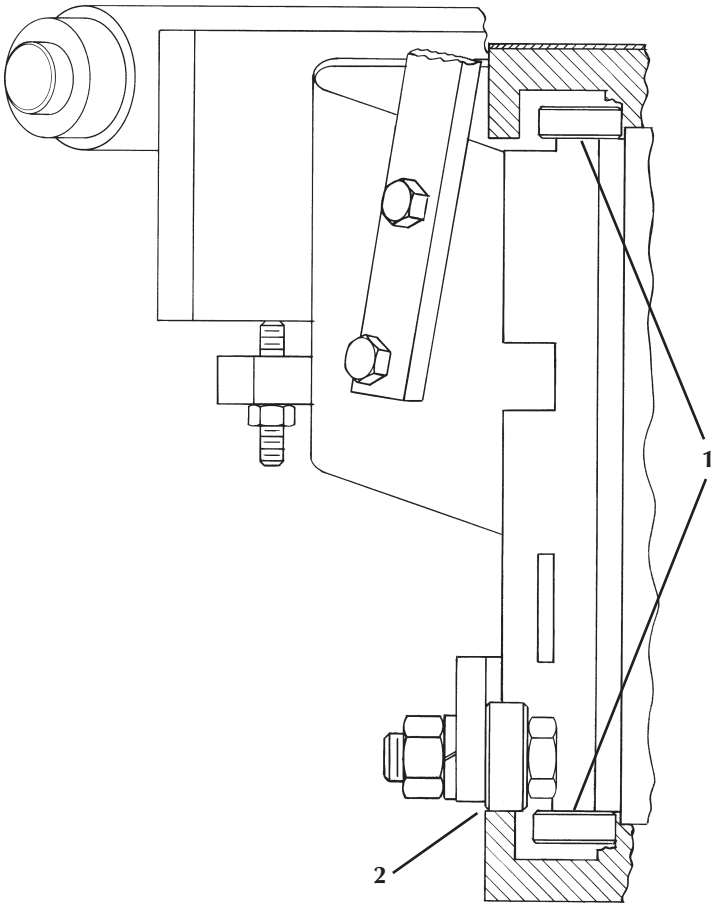

Bearing Carrier Assembly

Item No.	Part Number For Models: 90H 1000	1100 1200 1500 1600	1800 2000 3000 4000	Description
1	4500	4510	4514	Carrier Guide, 4 Reqd.
2	4499	4522	4522	Thrust Ball Bearing, 2 Reqd.

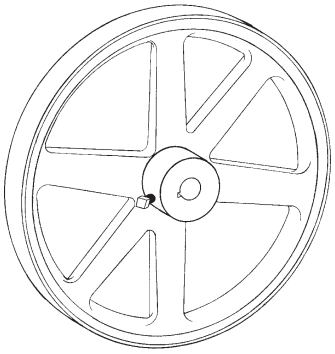

Drive Wheel With Vulcanized Rubber

Part Number For Models			
90H 900 1000 1100 1200	1440 1500 1600 1800 2000	3000 4000	Description
5367	5740	5775	Drive Wheel With Rubber

CAUTION: ***Disconnect power supply cord from power source before changing the blade or making any other repair or adjustment to the saw.***

Installation Instructions

1. Visually inspect machine for hidden shipping damage.
2. As part of the receiving inspection, check for broken ball bearings on the bearing carrier assembly. This is the assembly that the saw swivels on for miter cuts. CHECK ALL SIX BEARINGS. Two are located in the groove under the degree plate. **See illustration on page 4.**

IMPORTANT Model 2000, 3000 and 4000 owners note: The shut off rail was removed for shipping. You must mount the rail on the machine table before using the saw.

Vertical Sawing Position

NOTE: Model 1800 only – before raising the head on the Model 1800, remove the head weight adjustment handwheel and install the 6021 T-Nut. Attach the threaded vertical support bar (6022) tightly to the rear of the drive housing. See the chart on page 8. Adjust, if needed, to square blade with the vertical table.

1. Pull hydraulic pin at bottom of hydraulic. Disengage compensating spring assembly. Head is now free to raise to vertical position. Raise head up and over center. Hold head and gently let it move up to vertical position. DON'T LET THE HEAD DROP! **See illustration on page 8, or video.**
2. Slide the vertical saw table into the blade and against the back of the horizontal table. Secure with the screwless vise or C-clamps. Adjust the drive end of the blade guide assembly, if necessary, to provide support for that end of the vertical table.
3. Attach the vertical blade guard on the moveable guide arm and secure with wing nut supplied.
4. Position moveable arm as close to work as possible.

Removing and Replacing Blade

Call 1-800-383-5547 for experienced help in selecting the proper saw blades for your application.

1. Disconnect power supply cord from power source.
2. Raise saw head assembly until blade clears the back of the table. Close hydraulic valve to lock in position.
3. Open the covers of the idler and drive wheels.
4. Pivot the chip brush to horizontal position and lock in place.
5. Loosen blade tension T-handle sufficient to release the blade around the wheels. Pull blade out of the blade guide bearings.
6. Brush chips from blade guide bearings and housings. Wipe bearing surfaces clean. Check that all bearings are running free.
7. Check that the guide bearings are set correctly for the new blade thickness. Use a feeler gauge that is one thousandth of an inch thicker than the blade. This is the best method because it does not rely on judgement.

   A saw blade can also be used as a gauge, but it must be new. After the blade has been installed and under proper tension, check for proper spacing. Twist the blade at the idler and drive wheel side of the respective guide bearing housings. There should not be any noticeable motion of the blade on the other side of the guide bearings. Reset the gap to correct fit.
8. Place the new blade over the idler and drive wheels with the teeth facing toward you. The blade should run under the guides. The teeth should point out toward you and the tips of the teeth should point toward the motor end of the saw.

   A fast check is to compare the blade (as you place it over the idler wheel) with the decal on the top of the saw head. Check to make sure the blade is on both orange wheels.
9. By turning the T-Handle, apply tension to the blade until all slack is removed from the blade or the blade is pulled in a straight line across the top of the saw from wheel to wheel. Grasp the blade on each side of the guides and twist the blade. Push down on the teeth with your thumbs and roll the back of the blade between the guide bearings. Proper tension is 1-1/2 to 2 full turns (360) of the T-Handle.
10. Proper blade tension is reached by grasping the T-Handle and applying one full turn (360) on the tension handle. You can use the casting number on the handle as a reference point. Reconnect the power supply. Turn the saw on for a couple of revolutions to square the blade on the wheels. Turn the saw off. Now put the second full turn of tension on the T-Handle.

    Turn the saw on again for a few revolutions. Turn the saw off. Check the tracking of the blade on the wheels. On saws with a 9" wheel the blade runs centered on the wheels. On saws with 12" and 14" wheels the teeth of the blade should be sticking out past the edge of the wheel. The teeth should not be on the rubber of the idler or drive wheels. If the blade is not tracking properly then the idle wheel needs to be adjusted. If you think the idle wheel needs to be adjusted, call the factory at 1-800-383-5547 for assistance.
11. Check the blade tension by setting the guide housings about 8" apart then grasp the blade between the fingers and thumb halfway between the guide housings. With a rotating or twisting motion of the hand the blade should deflect no more than 1/8".

A video is available showing the proper procedure for removing and replacing blades, saw adjustments, troubleshooting and maintenance. If you did not receive a video with this machine or would like another copy, call the factory.

Troubleshooting Crooked Cuts

1. Check blade for worn or broken teeth and replace if needed.
2. Check to make sure that the number of teeth per inch on the blade fit the application. As a rule, only 6 to 12 teeth should be in contact with the workpiece.
3. Check the head pressure on the saw. The compensating spring tension should be 8 pounds with the blade 1" above the table, coming down with the hydraulic valve open.
4. Check the blade tension. Review the proper blade tension procedure under "Removing and Replacing Blade" on page 5, item 10.
5. Check the space between bearings of both guide bearing assemblies. It should be only .001" over the thickness of a new blade. As an example, a .033" feeler gauge would be used to set the guides for a .032" thick blade.
6. Check the blade tracking on the idler and drive wheels.

   9" solid wheels: blade in center of wheels

   12" spoked wheels: 3/4" wide blade should have teeth protruding from the side of the wheel about 1/8", and the 1" wide blade about 1/4".

   14" spoked wheels: 1" and 1-1/4" wide blades should have teeth protruding 1/4" to 5/16" from side of wheel.
7. Check to make sure that the blade guide assemblies are not too far apart. Set the idler blade guide closer to the work to provide greater support for the blade.

Saw Adjustments

(If above steps did not eliminate crooked cuts)

1. Squaring blade with back of saw table.

   Raise the head up 1/8" and hold in place with the hydraulic valve. Place a 6" square against the table back and move the head until the blade is exactly 90 degrees from the table back. Lock the head in position. Check that the POINTER points to zero (0 degrees) on the degree plate. If the pointer does not point to zero, bend the pointer so that it lines up to 0 degrees. The saw is now adjusted to cut from front to back accurately at 90 degrees and at all angles.
2. Square blade with top of saw table.

   Use a blade aligning tool of the "clip on" or magnetic type to attach to the blade. Set a 6" square on the table top with the blade vertical and touching the aligning tool. These test measurements should be made with the tools kept as close as possible to the guide bodies. If the blade is not square with the table, the guide bearing plate needs to be adjusted to bring the blade into alignment. **See illustration of Blade Guide Assembly on page 2.**

   First the wing nut, Item 9 in the illustration, must be loosened. Next, loosen nut, Item 13. The adjustment to the bearing plate is set using the cap screw, Item 14. If the adjustment requires that the cap screw be backed out, the adjustment stud, Item 2, must be manually pushed so it is in contact with the cap screw. When the blade is aligned parallel with the square, tighten the wing nut to lock the bearing plate in position. Hold the cap screw from turning and lock nut, Item 13, against the guide clamping bolt.

Blade Speeds

The V-belt must be changed on the pulleys to change speeds. For HIGH speed, place the belt in the largest pulley on the motor shaft and the smallest on the reducer shaft. For MEDIUM speed, the middle pulley is used on both shafts. For LOW speed, the smallest pulley on the motor shaft is used with the largest on the reducer.

Replacement of Hydraulic Oil

The hydraulic cylinder can be filled on the saw or in a bench vise.

THE SHAFT MUST BE FULLY PUSHED IN BEFORE STARTING TO FILL.

1. Remove pipe plug from near top of cylinder.
2. Fill with light weight hydraulic oil until oil flows back out of hole. Replace pipe plug.

Maintenance

A good clean machine is easy to operate and promotes safety.

1. Keep areas clean by brushing chips from table grooves, guide bodies, idler and drive wheels, pivot shaft hinge area and turntable grooves.
2. Oilite bushings in pivot shaft should be oiled annually.
3. Check oil level in hydraulic. Proper level is at pipe plug hole.
4. Oil in wormgear should be checked every 90 days. FILL TO PROPER LEVEL AT PLUG, BELOW THE BREATHER VENT, using 80 to 140 weight gear oil.

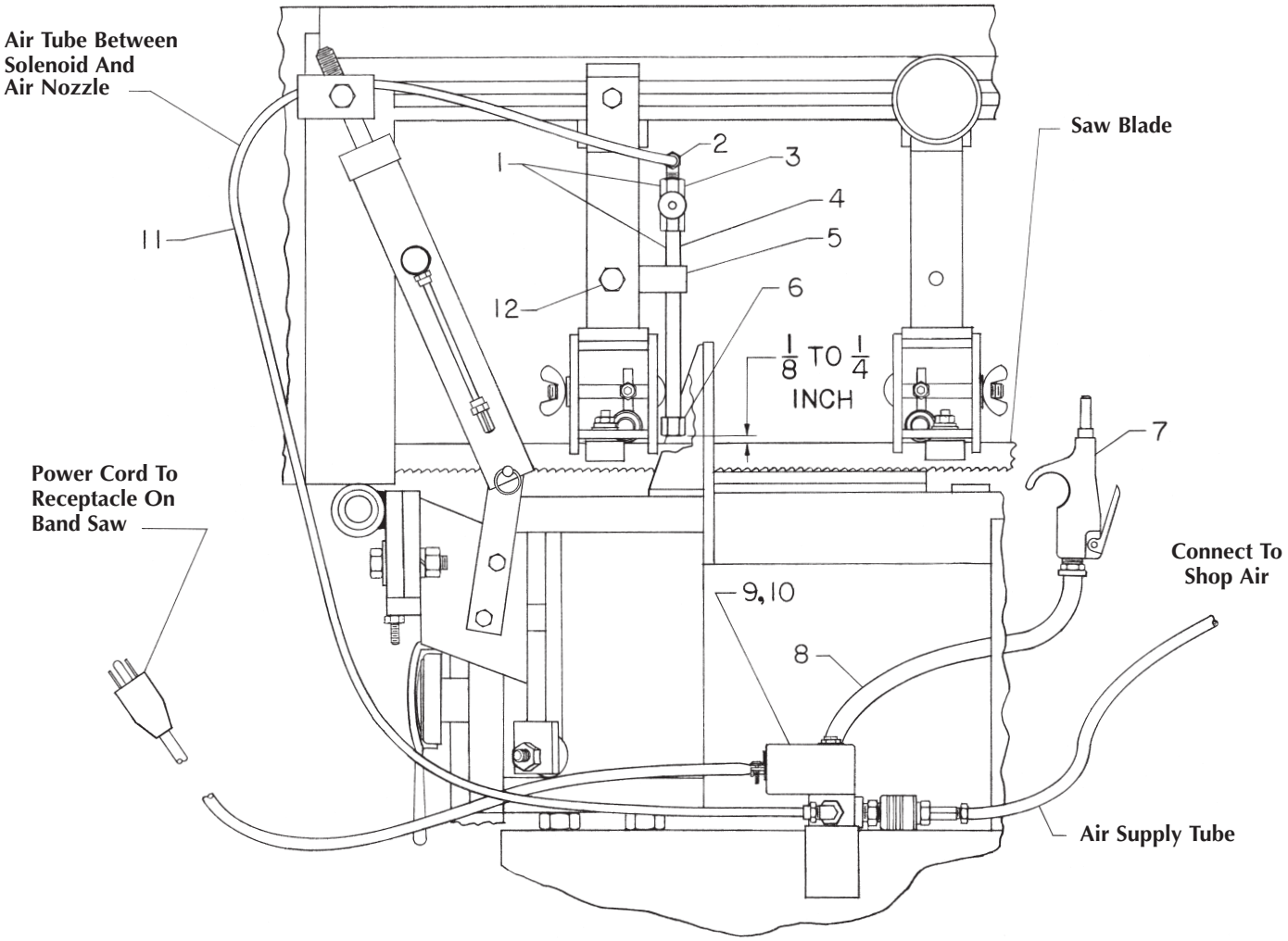

Air Cooling System

Item No.	Part Number For Voltage Rating 120	230	Description
Sys.	5922	5932	Air Cooling System-Complete
1	5925	5925	Valve and Nozzle Assembly
2	4730	4730	Elbow Fitting
3	4733	4733	Needle Valve
4	4744	4744	Nipple
5	5923	5923	Mounting Bar*
6	5924	5924	Nozzle Cap
7	4970	4970	Blow Gun
8	4969	4969	Air Hose Assembly
9	5903	5912	Solenoid Valve Assembly-Complete
10	5904	5913	Solenoid and Cord Assembly *Only*
11	5926	5926	Tubing, .25 OD, 5 Feet
12	4015	4015	Bolt, Hex. Head 5/16-18 x 1-1/4

* For saw Model 4000 use mounting bar 5928

ENLARGEMENT OF AIR NOZZLE

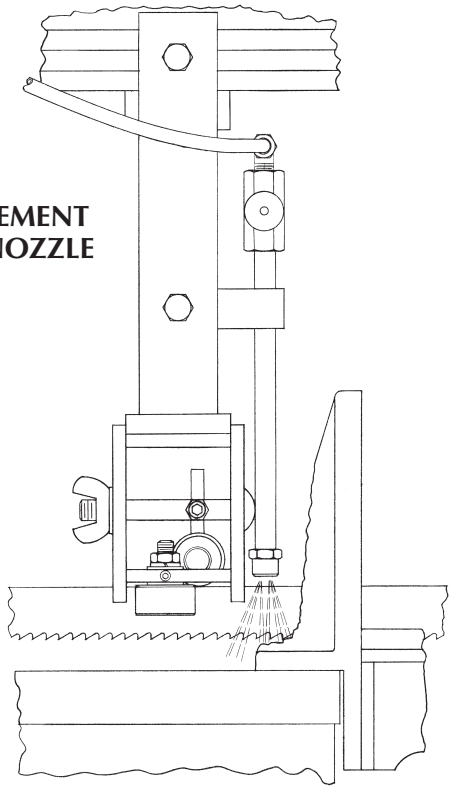

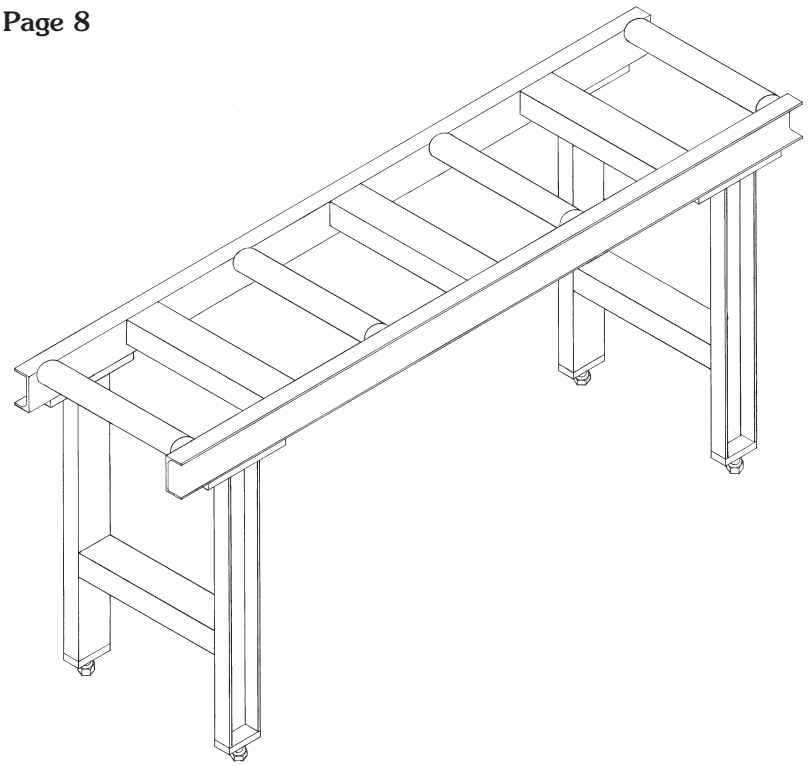

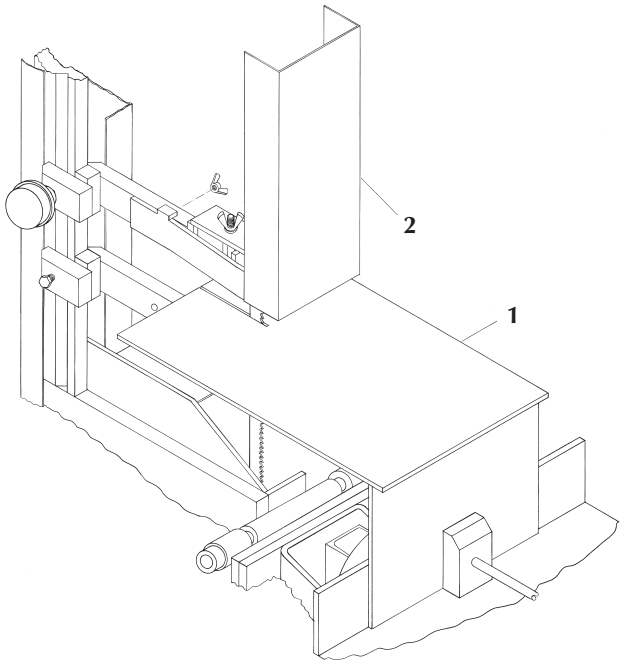

Heavy Duty Support Stands

Saw Model	Unit No.	Roller & Shaft	Length	Width	Roller Dia.	Height
3000 - 4000	6227	6198	5ft	20"	2.38"	24"
1800 - 2000	6228	6198	5ft.	20"	2.38"	22.5"
3000 - 4000	6225	6193	5ft.	12"	2.38"	24"
1800 - 2000	6229	6193	5ft.	12"	2.38"	22.5"

Vertical Table and Blade Guards

Order by Saw Model Number.
Table sold with blade guard.

Description/Item	Part Number For Models 90H 900 1100 1200	1500	1600	1800
Vertical Table #9374	✔		✔	
Vertical Table #5661		✔		
Vertical Table #6040				✔
Blade Guard #6041	✔	✔	✔	✔
T-Nut #6021*				✔
Vertical Support Bar #6022				✔

* Replace Head Weight Adjustment Handwheel with 6021 T-Nut

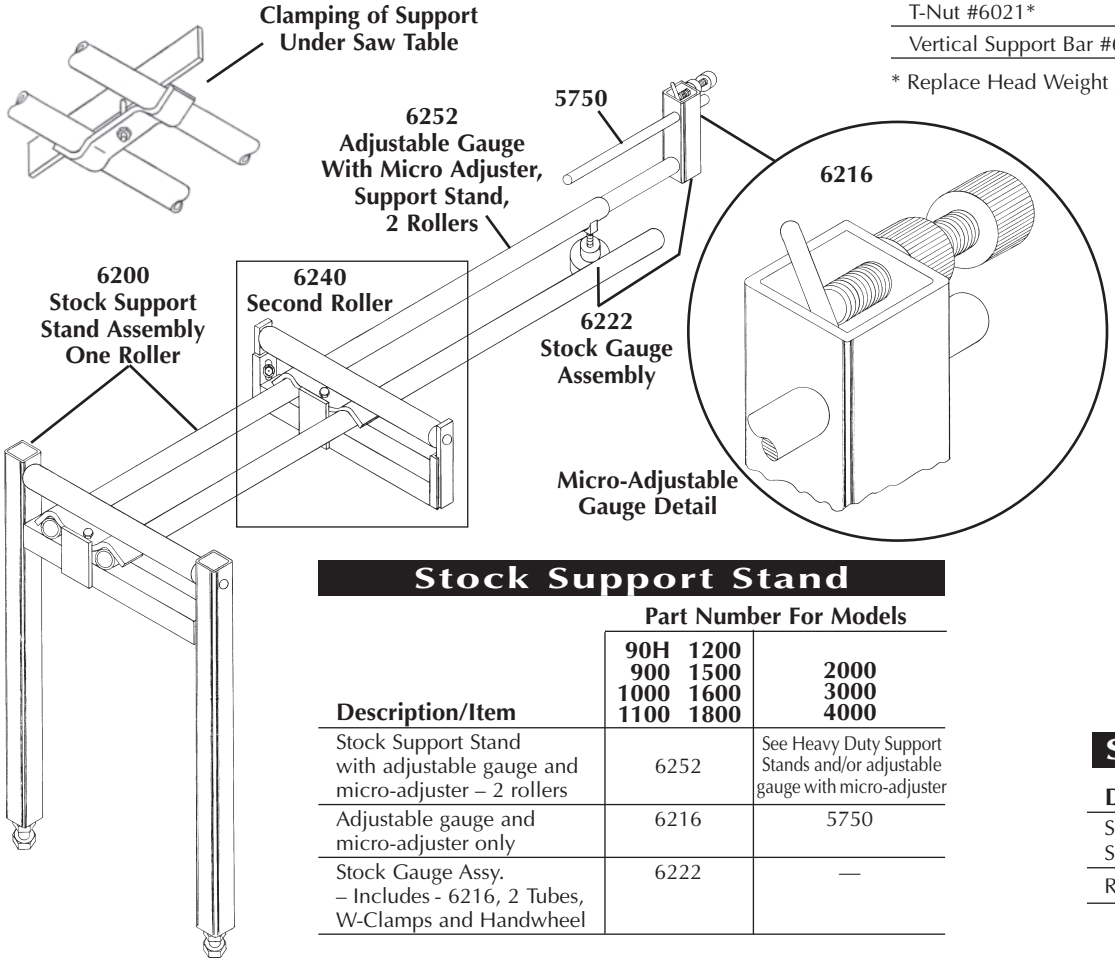

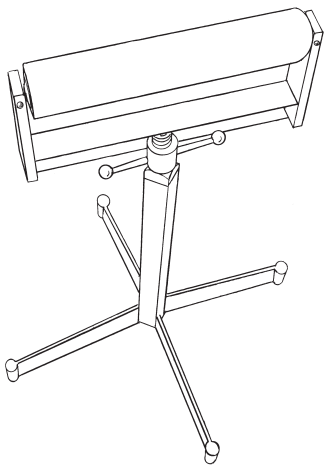

Stock Support Stand

Description/Item	Part Number For Models 90H 900 1000 1100 1200 1500 1600 1800	2000 3000 4000
Stock Support Stand with adjustable gauge and micro-adjuster – 2 rollers	6252	See Heavy Duty Support Stands and/or adjustable gauge with micro-adjuster
Adjustable gauge and micro-adjuster only	6216	5750
Stock Gauge Assy. – Includes - 6216, 2 Tubes, W-Clamps and Handwheel	6222	—

Single Stock Stand

Description	Part No.
Single Stock Stand Self Supporting Adjustable	6185
Roller and Shaft	6193